Copenhagen Vibrator Products

230V Electric Vibrator NEA

- 230V Single-phase
- Supplied with cable & condensator
- 2 poles 3.000 Rpm.
- 4 poles 1.500 Rpm.
- Circular Vibration
- Hygienic design
- Stainless Steel End-caps
- Available in ATEX
- IP 66-7 F Protection

NEA 230 Volt AC Single-phase NEA vibrators, provides the best specifications and performance for all industries and applications

NEA Vibrators is widely used for demanding applications like vibration tables, conveying, vibration transport, sieves, separators, and for emptying silos, hoppers and containers

230V Electric Vibrator NEA

2 Poles 230V AC Single-phase 3.000-3.600 Rpm. 50 Hz / 60 Hz

Vibrator	Housing		Working Moment [cmkg]		Centrifugal Force [N]		Power Input [Kw]		Nominal Current [A]		Weight [Kg.]	
	Size	Material	50 Hz	60 Hz	50 Hz	60 Hz	50 Hz 230 V	60 Hz 115 V	50 Hz 230 V	60 Hz 115 V	50 Hz	60 Hz
NEA 504	50	Alu	0,1	0,1	49	71	0,024	0,024	0,13	0,30	1,00	1,00
NEA 5020	60	Alu	0,4	0,4	197	284	0,035	0,035	0,17	0,42	2,20	2,20
NEA 5050			1	1	494	711	0,045	0,045	0,20	0,46	2,45	2,45
NEA 5060	100	Alu	1,2	1,2	592	853	0,11	0,11	0,56	1,52	4,9	4,9
NEA 50120	101	Alu	2,4	2,4	1.185	1.706	0,165	0,165	0,75	1,52	5,9	5,8
NEA 50200			4	3,2	1.974	2.274					6,5	6,3
NEA 50300	110	Alu	6	4	2.961	2.843	0,28	0,28	1,25	2,40	10,2	10,0
NEA 50550	120	Alu	11,5	6,9	5.676	4.904	0,5	0,5	2,30	4,50	16,3	16,1
NEA 50770	130	Alu	14,7	11	7.255	7.818	0,7	0,75	3,25	7,00	22,6	21,6

Design & Function
The NEA Vibrators is works like a circular rotating unbalanced motor, according to the short circuit runner principle and, apart from a few significant differences, are very similar to conventional electric motors.

The NEA Vibrator is driven by single-phase 230 V AC, and be supplied as 2-poles 3.000 Rpm or 4-poles 1.500 Rpm.

The NEA Vibrators is fitted with over-dimensioned roller bearings to ensure a long service life

Permissible ambient temperature
0° C to +40° C.

230V Electric Vibrator NEA

Dimensions for 2 Poles 230V Single-phase 3.000-3.600 Rpm. 50 Hz / 60 Hz

Vibrator	Housing Type	Dimensions [mm.]													Unbalances [Amount of Discs]	
		A	B	C	D	E	F	G	H	I	L	M	N	n ²	Type	
NEA 504	I	111	67	90	25-40	75	9	**5,5**	34	24	63	59	65	4	XL	8
NEA 5020	I	157	75	110	**60**	**85**	9	**6,5**	38	33	72	83	74	4	XL	8
NEA 5050		169			25-40	92				39						18
NEA 5060	II	197	121	125	60	100	20	**8,5**	71	33	92	86	105	4	XLs	4
					62	95										
					65	**85**										
					70	106										
NEA 50120	II	209	154,5	164	**65**	**140**	25	**13**	96	45	100	128	117	4	XLs	6
NEA 50200		225			62-74	106		9		53						10/8
NEA 50300	II	247	173	165	**65**	**140**	25	**13**	103	50	124	156	146	4	XLs	8 / 6
					90	125		13								
NEA 50550	II	283	192	217	**100**	**180**	30	**17**	113	63	143	137	168	4	XLs	10/6
					105	140		13								
NEA 50770	III	308	212	238	**100***	**180***	43	**17**	94	63	168	163	193	4	XLs	8 / 6

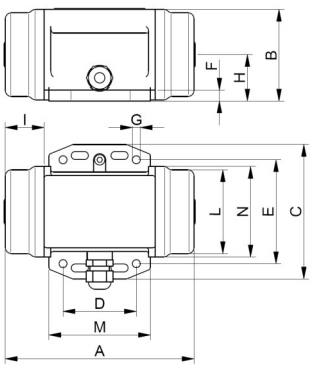

Housing Type I

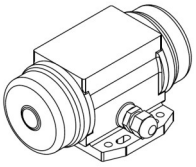

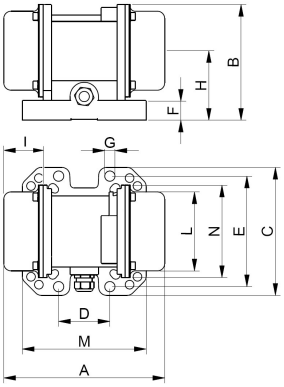

Housing Type II

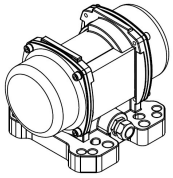

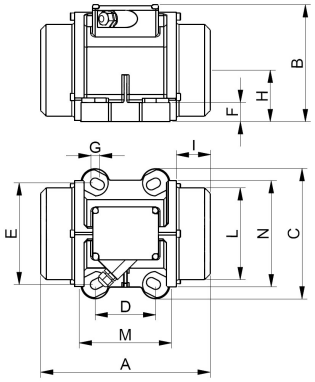

Housing Type III

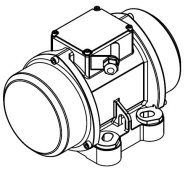

Unbalances

In each end of the vibrator's shaft, is adjustable unbalances mounted, which will create the rotating vibrations and nominal frequency according to the rotation speed.

The unbalances can be either increased or decreased and will influence on the working moment of the vibrator.

XL Unbalance

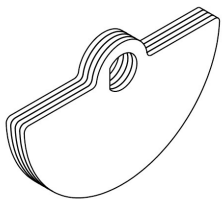

XM Unbalance

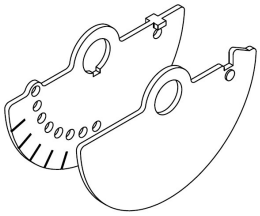

230V Electric Vibrator NEA

4 Poles 230V Single-phase 1.500-1.800 Rpm. 50 Hz

Vibrator	Housing		Working Moment [cmkg]		Centrifugal Force [N]		Power Input [Kw]		Nominal Current [A]		Weight [Kg.]	
	Size	Material	50 Hz	60 Hz	50 Hz	60 Hz	50 Hz 230 V	60 Hz 115 V	50 Hz 230 V	60 Hz 115 V	50 Hz	60 Hz
NEA 2530	101	Alu	2,4	2,4	296	426	0,09	-	0,43	-	6,1	5,8
NEA 2570			6,2	4,8	790	853					7,3	6,9
NEA 25210	120	Alu	16,8	11,8	2.073	2.097	0,21	-	1,00	-	12,8	11,8
NEA 25420	120	Alu	32,6	22,7	4.023	4.033	0,24	-	1,20	-	20,7	19,7
NEA 25540			43,8	32,6	5.404	5.792					22,7	21,7
NEA 25700	130	Alu	57,2	41,9	7.058	7.445	0,45	-	2,50	-	29,4	28,4

Dimensions for 4 Poles 230V Single-phase 1.500-1.800 Rpm. 50 Hz

Vibrator	Housing Type	Dimensions [mm.]													Unbalances [Amount of Discs]	
		Dimensions [mm.]														
		A	B	C	D	E	F	G	H	I	L	M	N	n ²	Type	
															Type	
NEA 2530	II	209	154,5	164	**65**	**140**	25	**13**	96	45	100	128	117	4	XLs	6
NEA 2570		241			62-74	106		9		61						16/12
NEA 25210	II	295	175,5	164	**65**	**140**	25	**13**	105	74	124	128	141	4	XS	4
					90	125		13								
NEA 25420	II	340	195	217	**100**	**180**	30	**17**	115	91	143	144	160	4	XS	4
NEA 25540		380			105	140		13		111						
NEA 25700	III	378	211	215	**100**	**180**	35	**17**	93,5	98	167	144	193	4	XS	4

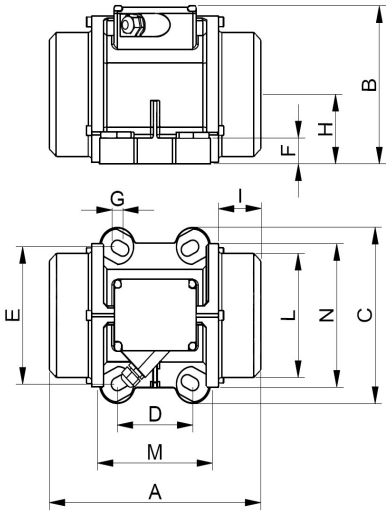

Housing Type III

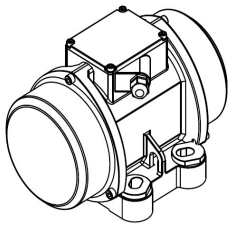

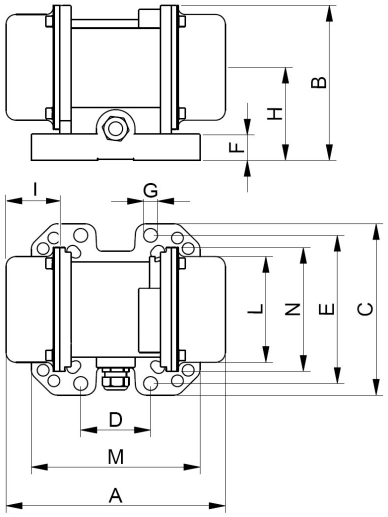

Housing Type II

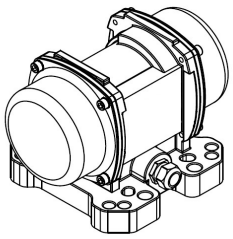

230V Electric Vibrator NEA

Special Version with Reduced Duty Time

Applications
NEA electric external vibrators are designed for continuous operation with 100% duty time. In addition, special versions with reduced duty times are available. The reduced duty time allows the use of smaller units possible with the same power output.

Design and functioning principle
Special vibrators with larger unbalances can be used for intermittent or short-time operation. Despite smaller unit size they deliver the same centrifugal forces as the next housing size up.
NEA with reduced duty times are built according to the customer's requirements, to enable individual solutions.

Special Version with CC Unbalances

Applications
The special version with CC unbalances are used when two different unbalance settings need to be available during operation.

Design and functioning principle
In order to use the CC unbalances, a suitable electric switching circuit is required so that the NEA can be operated in both directions. When the NEA rotes in one direction it operates with e.g. maximum unbalance.
When the direction of rotation changes, the outer unbalance disc automatically turns through a specified angle against the inner unbalance disc, creating a reduced unbalance setting (picture below). The CC unbalances are built according to the customer's requirements and allow a sec-

Special Version NEG S in Stainless Steel

Applications
NEG S electric external vibrators can be used wherever the surfaces are subject to particular requirements for chemical resistance. An important feature of the NEG S series is its modular construction. This enables economical production of even the smallest of series in various steel materials.
The protection class IP 66 (protection from dust entry and water flooding) allows cleaning with power jets and aggressive cleaning agents.

Design and functioning principle
All internal components of the stainless steel vibrators come from the established NEG series and are thus production proved.

Even the standard version of the NEG S has a surface quality of 6,3 µm and therefore satisfies the requirements for the chemical and pharmaceutical industries. A higher surface quality can easily be provided if required, e.g. for the food industry. Stainless steel housings are generally heavier than the standard housings. The greater mass must therefore be considered in the layout stage.

BZ Motor Brake

Type	Voltage [Volt]	Protection Class	Max. Nominal Power 50 Hz/60 Hz
BZ 30	1~230 V or 3~400 V 50/60 Hz	IP 23	5 kW / 5,5 kW
BZ 70			10 kW / 11 kW
BZ 200			26 kW / 28 kW

Applications
BZ Braking devices are used for efficient deceleration of running vibrators, to a quick standstill.
It is often necessary to brake the rotating vibrators fast on vibration tables or conveyers to avoid resonance in the application.
The BZ Braking device offers a very efficient braking in a very compact design.

Design & Function
Upon activation of the brake, the load-resistant power electronics changes direction of the electronic rotational field, and decelerates the vibrators instantly.
The momentarily high braking currents, are easily tolerated by the vibrator.

The BZ braking device is only suitable for mains frequency of 50 Hz or 60 Hz.

It is not permitted to bed operated in conjunction with a frequency converter.

Operation temperature is 0º C. to +40º C.

230V Electric Vibrator NEA

NFU & NFI Frequency Converter
SRF Frequency Control

Applications
The SRF, NFU and NFI frequency controls is widely used for speed control (frequency) of electric vibrators.
Some applications require certain frequencies, or the option to change frequency for different loads or materials.
These frequency converters with simple and compact design, is the best solution for complete control of your application.

Design and Function
Low-loss power electronic allows the operation at input voltages with high tolerances.

These great frequency converters generates 3-phase voltages with variable frequency of 0 to 100 Hz

The frequency converters is delivered with all necessary operation and installation manuals.

Permissible temperature: 0º C to +40º C

Model	Supply Voltage [Volt]	Max Motor~		Size (B x H x D) [mm.]
		Power Input [Kw]l	Current [A]	
SRF 1-007 / 4,8	1 ~ 200….240 V 50 / 60 Hz	0,75	4,8	300 x 400 x 200
SRF 1-011 / 6,9		1,1	6,9	
SRF 1-022 / 11		2,2	11,0	400 x 500 x 250
SRF 2-007 / 2,3	3 ~ 380… 415 V 50 / 60 Hz	0,75	2,3	400 x 500 x 250
SRF 2-015 / 4,1		1,5	4,1	
SRF 2-022 / 5,5		2,2	5,5	
SRF 2-040 / 9,5		4,0	9,5	
SRF 2-055 / 14,3		5,50	14,3	600 x 600 x 300
SRF 2-075 / 17		7,50	17,0	
SRF 2-110 / 27,7		11,00	27,7	
SRF 2-150 / 33		15,00	33,0	

Model	Supply Voltage [Volt]	Max Motor~		Size (B x H x D) [mm.]
		Power Input [Kw]l	Current [A]	
NFU 1-004 / 3,3	1 ~ 200….240 V 50 / 60 Hz	0,4	3,3	210 x240 x 163
NFU 1-007 / 4,8		0,75	4,8	
NFU 1-011 / 6,9		1,1	6,9	215 x 297 x 192
NFU 1-015 / 8,0		1,5	8,0	
NFU 1-022 / 11		2,2	11,0	230 x 340 x 208
NFU 2-004 / 1,5	3 ~ 380… 415 V 50 / 60 Hz	0,4	1,5	400 x 500 x 250
NFU 2-007 / 2,3		0,75	2,3	
NFU 2-011 / 3,0		1,1	3,0	
NFU 2-015 / 4,1		1,5	4,1	
NFU 2-022 / 5,5		2,2	5,5	230 x 340 x 208
NFU 2-040 / 9,5		4,0	9,5	

SRF Control installed in a IP 54 enclosure with a colour touch panel

NFI Frequency converter for installation in customer's own control enclosure.

NFU Frequency converter with IP 54 protection, for direct vibrator connection and full speed control and start & stop activation.

230V Electric Vibrator NEA

For Start & Stop activation for electric vibrator

- For 1 unit three phase 400V AC 50/60 HZ NEG Vibrator
- For safety applications
- Build-in Circuit-breaker and Thermal Protection

Product No.	Thermal protection adjustment range
83199310	0,16 - 0,25 A
83199311	0,25 - 0,40 A
83199312	0,40 - 0,63 A
83199313	0,63 - 1,00 A
83199314	1,00 - 1,60 A
83199315	1,60 - 2,50 A
83199316	2,50 - 4,00 A
83199317	4,00 - 6,30 A
83199318	6,00 - 10,00 A
83199319	9,00 - 14,00 A
83199320	13,00 - 18,00 A
83199321	17,00 - 23,00 A

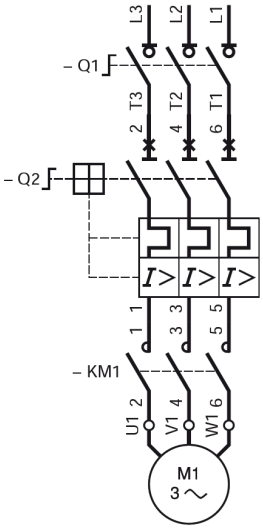

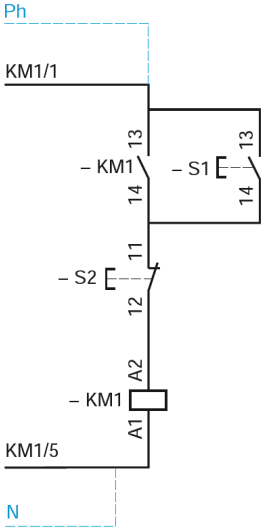

For Start & Stop activation for electric vibrators

- For 1 or 2 units single phase 230V AC 50/60 HZ NEA Vibrators
- For 1 or 2 units three phase 400V AC 50/60 HZ NEG Vibrators
- Can not be used for motor-protection

Product No.	Power Rating 50/60 HZ	Max. Current [A]	Enclosure Size (Width x Height x Depth) [mm.]	Weight [Kg.]
83199300	3x 400V~	9	88 x 166 x 128,5	0,92
83199301	3x 400V~	12	88 x 166 x 128,5	0,92
83199302	3x 400V~	18	101 x 201 x 153,5	1,015
83199303	3x 400V~	25	101 x 201 x 153,5	1,015
83199304	3x 400V~	35	101 x 201 x 153,5	1,015
83102050	1x 230V~	9	88 x 166 x 128,5	0,92